www.jenesis.com.tr/en

JENESIS

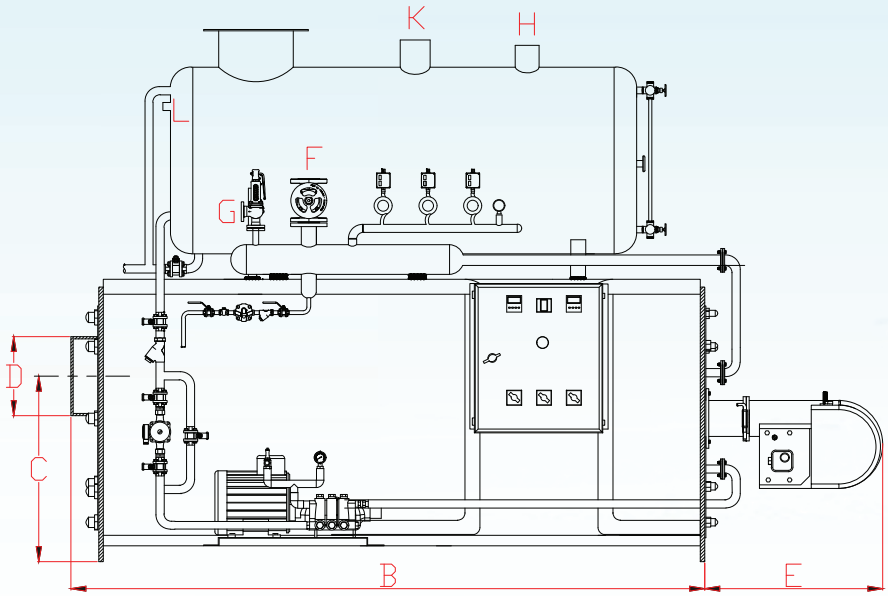

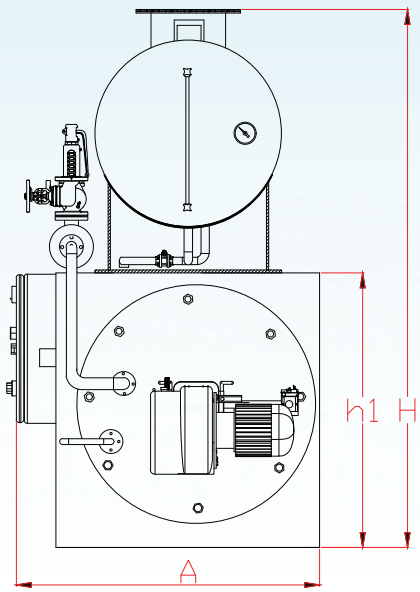

TECHNICAL DATA TABLE

Type		SHS 150	SHS 250	SHS 350	SHS 500	SHS 750	SHS 1000	SHS 1250	SHS 1500	SHS 1750	SHS 2000	SHS 2500	SHS 3000	SHS 4000
Steam Capacity	kg/h	150	250	350	500	750	1000	1250	1500	1750	2000	2500	3000	4000
Heat Capacity	kcal/h	90.000	150.000	210.000	300.000	450.000	600.000	750.000	900.000	1.050.000	1.200.000	1.500.000	1.800.000	2.400.000
Heat Capacity	kW	105	174	244	349	523	698	872	1.046	1.221	1.395	1.744	2.093	2.790
Heat Transfer Surface	m²	7,5	10	13,5	17	24	29	35	42	45	50	73	78	105
Max. Working Pressure (*)	bar	10	10	10	10	10	10	10	10	10	10	10	10	10
Electricity	V/Hz	380/50	380/50	380/50	380/50	380/50	380/50	380/50	380/50	380/50	380/50	380/50	380/50	380/50
Electricity Power (2*)	kW	1,5	1,7	1,7	1,75	2,65	3,5	4,5	4,5	6	6	11	11	13
Electricity Cable (3*)	TTR	5*2,5	5*2,5	5*2,5	5*2,5	5*2,5	5*2,5	5*4	5*4	5*4	5*4	5*10	5*10	5*10
Smoke Pressure Drop	mbar	0,9	1,2	1,5	1,8	2,1	2,4	2,7	3	3,3	3,6	4,2	5	6,3
Fuel Consumption (With Eco/Without Eco)		**SHS 150**	**SHS 250**	**SHS 350**	**SHS 500**	**SHS 750**	**SHS 1000**	**SHS 1250**	**SHS 1500**	**SHS 1750**	**SHS 2000**	**SHS 2500**	**SHS 3000**	**SHS 4000**
Natural Gas	m^3/h	11,3/12,1	18,9/20,2	26,5/28,3	37,9/40,4	56,8/60,6	75,8/80,8	94,7/101	113,6/121,2	128,6/137,2	151,5/161,6	189,4/202	227,3/242,4	303/323,2
LPG	kg/h	8,3/8,9	14/14,9	19,5/20,8	27,9/29,8	41,8/44,6	55,8/59,5	69,8/74,4	83,7/89,3	95/101,3	111,6/119	139,5/148,8	167,3/178,5	223,1/238
Diesel	kg/h	10,1/10,4	16,7/17,3	23,4/24,2	33,5/34,6	50,2/51,9	67/69,2	83,7/86,5	100,5/103,8	113,8/117,6	133,9/138,4	167,4/173	200,9/207,6	267,9/276,8
Fuel-Oil	kg/h	10,5/10,9	17,6/18,2	24,7/25,5	35,2/36,4	52,8/54,6	70,5/72,8	88,1/91	105,7/109,2	119,7/123,7	140,9/145,6	176,1/182	211,4/218,4	281,8/291,2
Dimensions		**SHS 150**	**SHS 250**	**SHS 350**	**SHS 500**	**SHS 750**	**SHS 1000**	**SHS 1250**	**SHS 1500**	**SHS 1750**	**SHS 2000**	**SHS 2500**	**SHS 3000**	**SHS 4000**
Width (A) (4*)	mm	1155	1175	1335	1400	1510	1555	1570	1660	1720	1820	1950	2000	2365
Lenght (B) (5*)	mm	1560	1670	1860	2040	2230	2450	2850	3000	3000	3040	3900	4030	4730
Burner Lenght (E) (6*)	mm	250-350	250-350	500-800	500-800	500-800	800-1200	800-1200	800-1200	800-1200	800-1200	800-1200	1100-1300	1100-1300
Total Height (H)	mm	1645	1775	2095	2160	2380	2645	2660	2790	2870	3090	3380	3550	4065
Body Height (h1)	mm	1015	1015	1235	1300	1410	1565	1580	1680	1740	1810	1970	2020	2385
Condensate Tank Height (h2)	mm	630	760	860	860	970	1080	1080	1110	1130	1280	1410	1530	1680
Chimney Outlet Diameter (D)	mm	170	170	170	280	300	350	350	400	400	400	450	450	450
Chimney Connection Height (C)	mm	690	770	900	910	1000	1130	1145	1210	1270	1340	1475	1525	1890
Steam Outlet (F)	DN	25	32	40	50	65	65	65	80	80	100	100	125	125
Feed Water Inlet (L)	DN	1"	1"	1"	1"	1"	1"	1"	1"	1"	1"	1"	1"	1"
Safety Valve Outlet (G)	DN	32	32	32	32	32	32	32	40	50	50	50	50	65
Natural Gas Inlet (7*)	DN	3/4"	3/4"	3/4"	1"	1 1/2"	1 1/2"	1 1/2"	1 1/2"	1 1/2"	1 1/2"	1 1/2"	1 1/2"	2"
Condensate Return Inlet (H)	DN	1"	1 1/4"	1 1/2"	1 1/2"	2"	2"	2"	3"	4"	4"	5"	5"	5"
Air Vent Outlet (K)	DN	1 1/4"	2"	2"	2"	2 1/2"	2 1/2"	2 1/2"	4"	5"	5"	6"	6"	6"
Weight (8*)	kg	760	820	920	1240	1780	1880	2170	2830	3010	3320	4590	4910	6550
Coil Water Volume	Liter	41	56	102	127	183	220	293	350	370	415	750	803	1420

(1*) It can be manufactured to higher working pressures upon order.
(2*) It may vary depending on burner brand, model, fuel type and number of pumps. Fuel type is considered as Natural Gas.
(3*) It is stated that the cable will be pulled from a distance of no more than 30 meters. Cable should be checked for longer distances.
(Grounding specific resistance must be less than 1.5 Ohms or Voltage between neutral and ground terminals must not exceed 1.5 Volts.)
(4*) Included electric control panel and separator.
(5*) Excluding the burner lenght.
(6*) Burner length varies from brand to brand or principle of operation. Approximate dimensions are given.
(7*) Burner may vary according to the working pressure. Burner inlet gas pressure is considered as 300 mbar.
(8*) Complete empty weight, including condensate tank and all accessories.

Jenesis reserves the right to change all data according to technological developments.